TufTile®

ADA DETECTABLE WARNING PRODUCTS

TACTILE DIRECTIONAL INDICATORS

TufTile.com

1-888-960-8897

905 Telser Road, Lake Zurich, IL 60047

TufTile®

TACTILE DIRECTIONAL INDICATORS

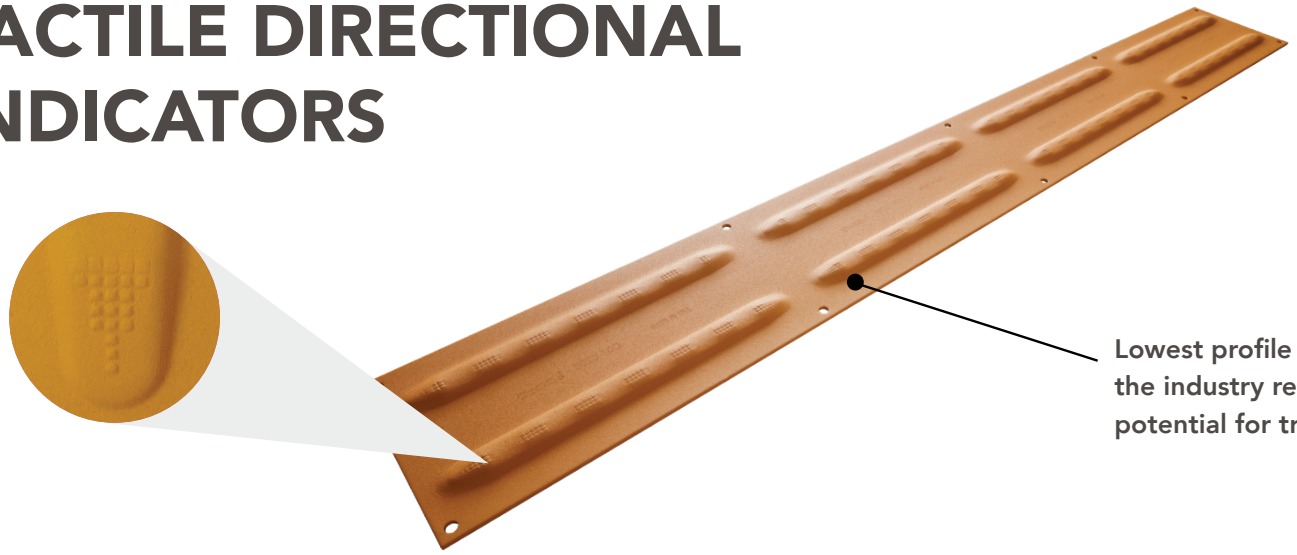

Creating Safe Passage on Shared-Use Paths

TACTILE DIRECTIONAL INDICATORS
For shared-use paths and to separate pedestrians from bicycles and vehicles where no curb or barrier exists.

PROTECTING PERSONS WITH LOW VISION
Ideal for high-caution areas including shared-use paths, transit board platforms, stairs, escalators, elevators, and more.

BEST-IN-CLASS DESIGN
Designed to ISO 23599 standards, the multi-bar system is easily modified, saving time and money. Reduce trip hazards with the lowest profile edge available.

PRODUCT ASSORTMENT
Available in 10 gauge and 16 gauge galvanized steel for wet-set or surface-applied installation. Several straight and angle sizes: 6"x12", 6"x48", 12"x12", 12"x24", 12"x60", 30° & 45° angles, 24"x24".

SUPERIOR COLOR & PROTECTION
In-house powder coating system provides superior UV protection and slip and abrasion resistance.

G90 GALVANIZED STEEL
G90 Galvanized steel tactile directional indicators are significantly more durable than composite and will not bloom, crack, chip, or fade.

10-YEAR WARRANTY
For full warranty information visit www.tuftile.com.
Meets Buy America Act 23 C.F.R. § 635.410.

TufTile.com
1-888-960-8897
905 Telser Road, Lake Zurich, IL 60047
linkedin.com/company/tuftile-inc/

TufTile®

MULTI-BAR SYSTEM

The layout of the tactile directional indicator is critical to the person depending on them for safe maneuvering of the area. A single row of directional indicators in the center of the path indicates inbound and outbound pedestrian and non-motorized traffic. Multiple rows along the edge establish a boundary.

Field modifications during installation are common, and with TufTile's multi-bar system, they are also quick and easy. To create multiple rows, simply place two or more indicators side-by-side until the desired width is achieved.

FEATURES

- Quickly complete field installations with side-by-side multi-bar design
- G90 powder-coated galvanized steel
- Lowest profile edge in the industry
- Save money with only two SKUs
- Replaceable

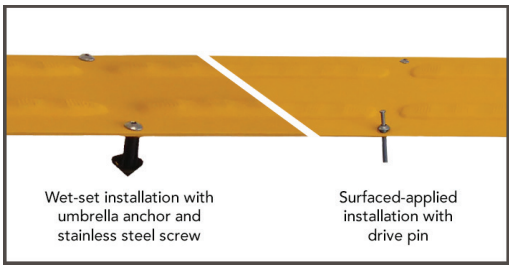

TufTile®

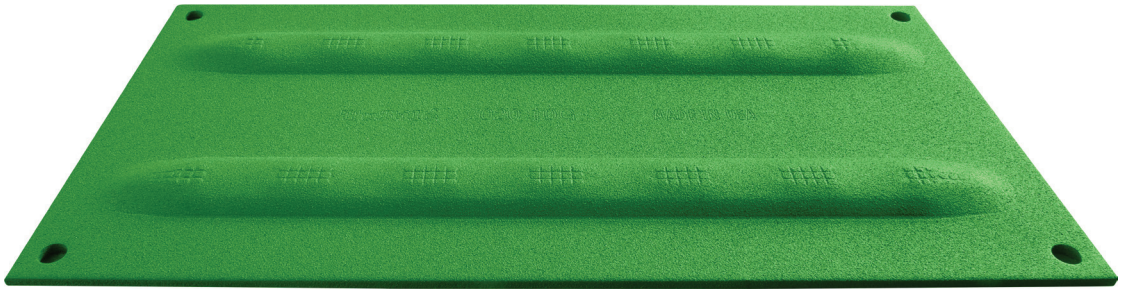

TUFTILE IN-HOUSE POWDER COATING ADVANTAGE

TufTile's in-house powder coating system, with multi-stage wash and zirconium rinse, ensures superior bonding and adhesion of the powder-coated finish.

- UV stable finish will not bloom, crack, chip, or fade
- Wet & dry slip-resistant surface
- Available in nine colors and natural
- Custom colors available with minimum order quantity

Colors Available

PRODUCT SPECIFICATIONS

ISO 23599 Compliant

Galvanized Steel Test Data		
Galvanization	G90 Guardrail Grade	G90
ASTM C 501	Abrasion Resistance	0.005
FDOT FM 3 - C 1028	Slip Resistance	Dry - 0.90, Wet - 0.81
ASTMA A 370	Tensile Strength	49,770 psi
ASTM D 695	Compressive Properties	55,170 psi
ASTM D 5420	Impact Resistance	No Cracking, No Delamination
ASTM E 84-18 ANSI/UL723	Test for Surface Burning Characteristics	CFS - 0.00, FSI - 0, CSD - 5.8, SDI - 5

MADE IN THE USA

Email All Orders To: sales@tuftile.com
Contact Customer Service: 1-888-960-8897
View the entire TufTile product portfolio at tuftile.com

100% RECYCLABLE

GALVANIZED STEEL SAFETY DATA SHEET (SDS)

TufTile®

SECTION I: MATERIAL IDENTIFICATION

PRODUCT NAME:	Galvanized Steel
CHEMICAL FAMILY:	Iron, Manganese, Chromium, Silicon, Nickel, Vanadium, Zinc
MANUFACTURER:	Steel Dynamics, Inc., Butler, IN 46721
CONTACT ADDRESS:	TufTile® 905 Telser Rd., Lake Zurich, IL 60047
PHONE:	(888) 960-8897

SECTION II: COMPOSITION/INFORMATION ON INGREDIENTS

Hazardous Components:	None in solid form
Composition:	Iron (Fe), Manganese (Mn), Chromium (Cr), Silicon (Si), Nickel (Ni), Vanadium (V), Zinc (Zn)
Melting Temperature:	2750 Degrees Fahrenheit

SECTION III: PHYSICAL CHARACTERISTICS

Emergency Overview:	This material is NOT HAZARDOUS by OSHA
Appearance and Odor:	Solid Mass, No Odor
Specific Gravity:	7.80 g/cc
Freezing Point:	N/A
Solubility in Water:	N/A
% Volatile by Volume:	N/A
Boiling Point:	ND
pH:	N/A

SECTION IV: FIRE AND EXPLOSION INFORMATION

Flammability:	Non-flammable, non-combustible
Means of Extinction:	N/A
Special Procedures:	None
Explosion Data:	None Known
Sensitivity of Mechanical impact:	None
Hazardous Combustion:	None Known
Auto ignition Temp:	N/A
Sensitivity to Static:	N/A

SECTION V: HEALTH HAZARD DATA

Permissible Exposure:	N/A for product (See Section II above)

SECTION VI: REACTIVITY DATA

Chemical Stability:	Steel products are stable under normal storage and handling conditions.
Reactivity:	Not Determined (ND) for product in a solid form.

SECTION VII: SPILL OR LEAK PROCEDURES

Spill:	None (Solid Mass Product)
Waste Disposal:	Recycle or Recover if possible

SECTION VIII: PROTECTIVE EQUIPMENT TO BE USED:

Protective Gloves:	Wear protective gloves / protective clothing
Eye Protection:	Wear safety glasses with side shields when cutting tiles

SECTION IX: LEGAL DISCLAIMER

The above information is based on the data of which we are aware and is believed to be correct as of the date hereof. Since this information may be applied under conditions beyond our control and with which may be unfamiliar and since data made available subsequent to the date hereof may suggest modifications of the information, we do not assume any responsibility for the results of its use. This information is furnished upon condition that the person receiving it shall make his own determination of the suitability of the material for his particular purpose.

DIRECTIONAL GUIDANCE SURFACE-APPLIED INSTALLATION INSTRUCTIONS

1. Read installation instructions thoroughly before you begin.

2. Surface must be clean and free of debris before beginning. A wire brush or cup grinder may be needed to address any imperfections.

3. Place Directional Guidance Tile on surface where it is to be installed and mark one side (Fig. 1).
   Note: A chalk line is recommended to maintain a straight installation.

Fig. 1

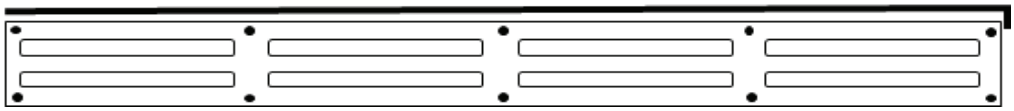

4. Remove and apply sealant to the back side of the tile between bars as required (Fig. 2).
   Note: Use sealant according to manufacturers instructions.

Fig. 2

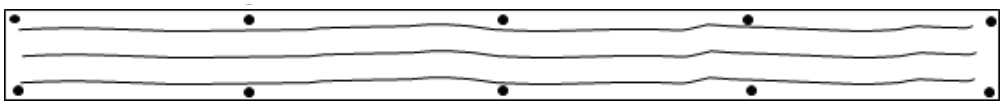

5. Place tile in marked location and drill 2 - 1/4" x 2" minimum deep holes and insert drive pin fasteners (Fig. 3).
   Note: Do not drive pins yet as these are to keep tile in place while drilling remaining holes.

Fig. 3

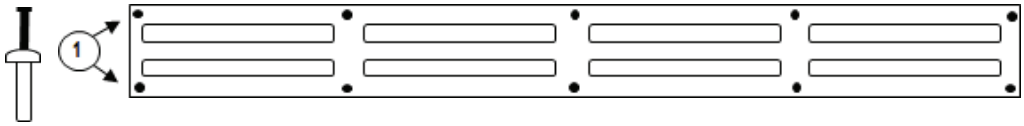

6. Continue drilling holes in all anchor locations moving across the tile (Fig. 4). **Once holes are drilled, clean the tile with a broom or blower before inserting remaining drive pins.**

Fig. 4

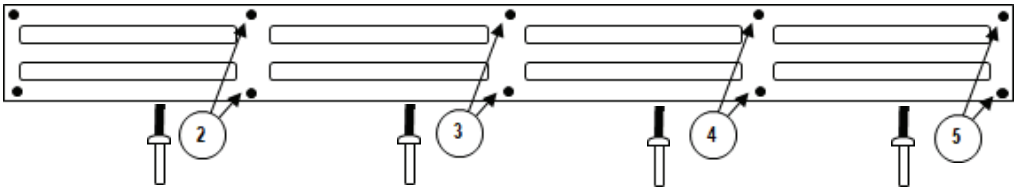

7. Insert drive pins and hammer them in moving down the tile in one direction (Fig. 5). **Note: Hammer pin so that it is even with the head of the anchor.**

Fig. 5

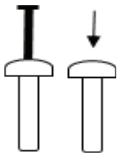

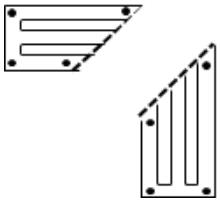

<u>Important: If cutting is required, new holes need to be drilled and anchors inserted.</u>

Installation is now complete.

<u>Click here</u> for more information including an installation video tutorial. Contact us at 888-960-8897 with questions.

TufTile®

GALVANIZED STEEL WET-SET TACTILE DIRECTIONAL INDICATOR (TDI) INSTALLATION INSTRUCTIONS

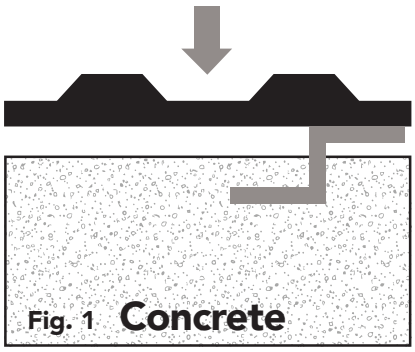

Fig. 1

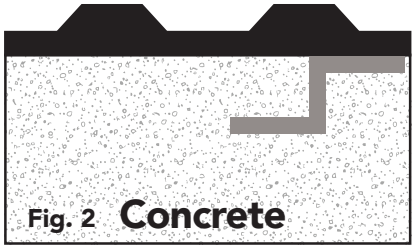

Fig. 2

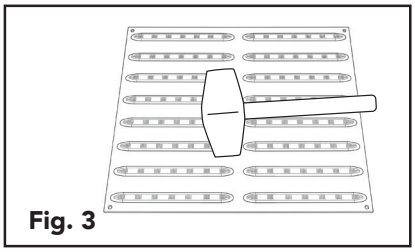

Fig. 3

Read installation instructions thoroughly before you begin.
For Federal compliance documents click here.

1. Be sure that concrete is compliant with ADA guidelines and engineer's specifications to ensure that proper installation can be achieved.

2. Slowly press the tile into concrete. **(Fig. 1 & 2) IMPORTANT: Do not stand on tile during installation.**

3. Using a rubber or wooden mallet, tap the entire surface of the tile to ensure consolidation around the anchors. **(Fig. 3) NOTE: Installing tiles after moisture is gone from the top will help control floating.**

4. Finish concrete to required specifications. **NOTE: Do not stand or walk on tile until concrete is fully cured.**

Installation is now complete.

CONNECTING UNITS

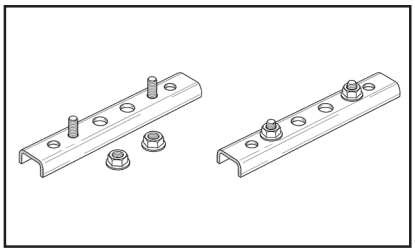

In a wet-set installation multiple units can be butted together OR connected. A connector, sold seperately is available.

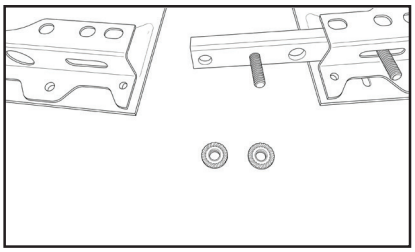

Insert connector into the Z-Bracket anchor on one unit. Butt the next unit inserting connector with bolts protruding as shown.

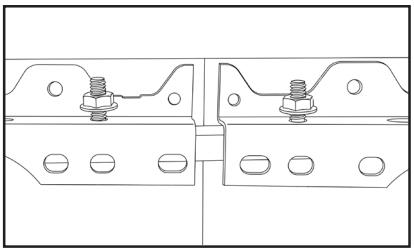

Attach nuts to bolts and tighten.

Click here for more information including an installation video tutorial. Contact us at 888-960-8897 with questions.

6" X 12" X 10 GA (REPLACEABLE)

GALVANIZED STEEL TACTILE DIRECTION INDICATOR

TufTile®

DRW NO		REVISED	
DT61210GV-XX-YYY		9-12-24	
TOLERANCE	SCALE	REV	DATE
+/- 0.050		1	10-20-20

NOTES:

"XX" WS DESIGNATES WET SET

"XX" SA DESIGNATES SURFACE APPLIED

"YYY"DESIGNATES COLOR

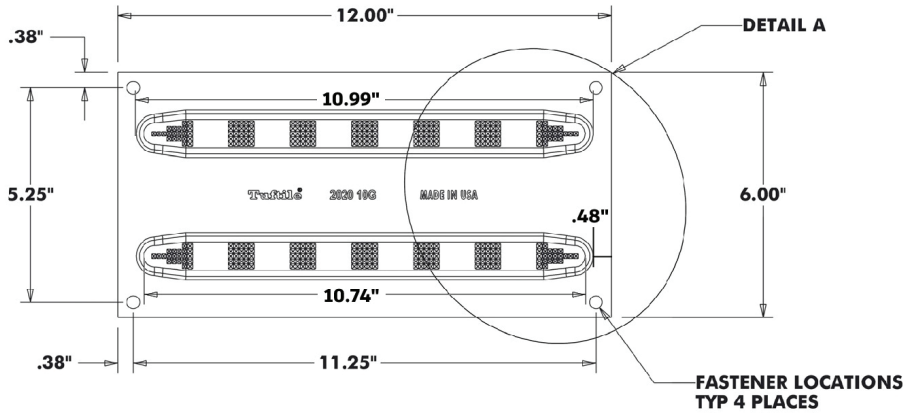

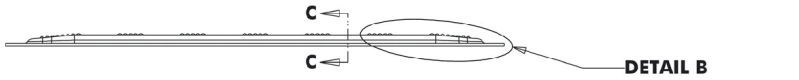

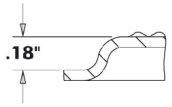

SECTION C-C

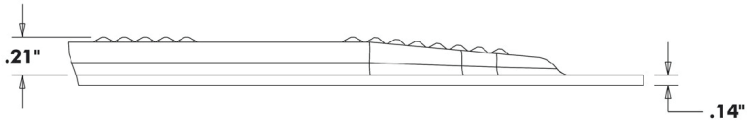

DETAIL B

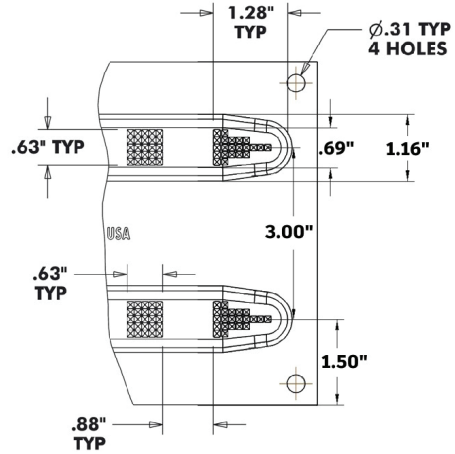

DETAIL A

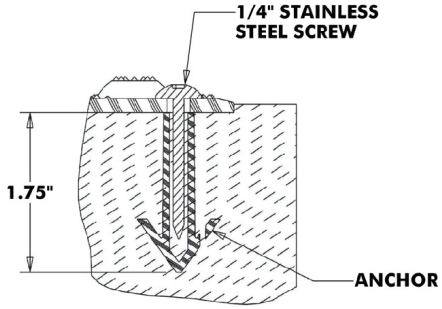

WET SET ANCHOR DETAIL
(FRESH CONCRETE)

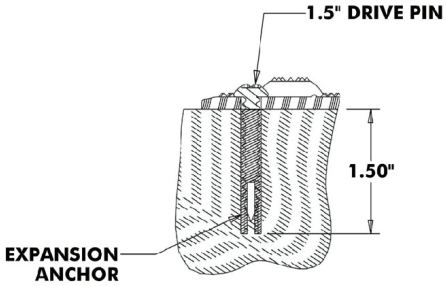

EXPANSION ANCHOR DETAIL
(HARDENED CONCRETE)

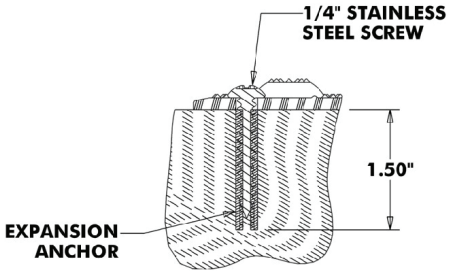

EXPANSION ANCHOR DETAIL
(ASPHALT)

6" X 48" X 10 GA (REPLACEABLE)

GALVANIZED STEEL TACTILE DIRECTION INDICATOR

TufTile®

DRW NO		REVISED	
DT64810GV-XX-YYY		9-12-24	
TOLERANCE +/- 0.050	SCALE	REV 1	DATE 10-20-20

NOTES:

"XX" WS DESIGNATES WET SET

"XX" SA DESIGNATES SURFACE APPLIED

"YYY"DESIGNATES COLOR

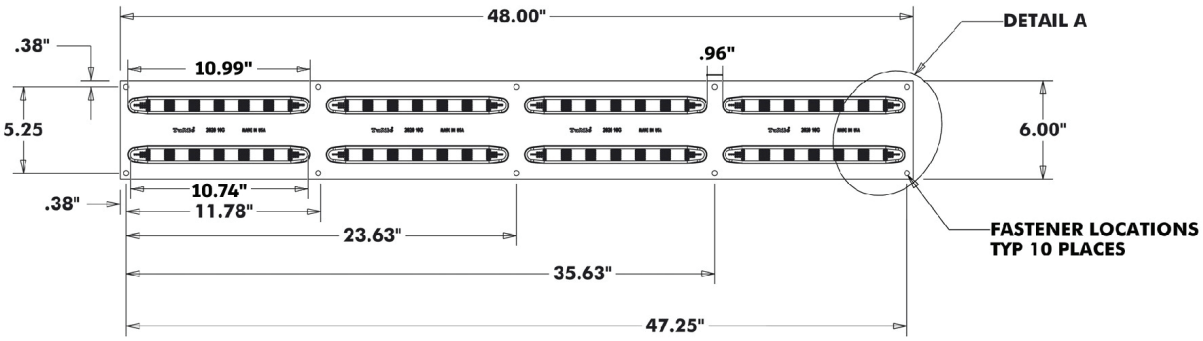

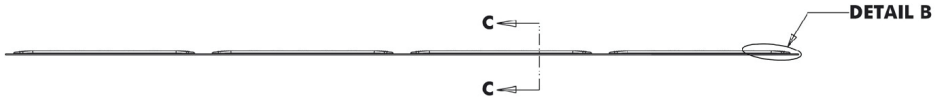

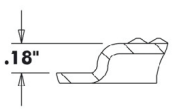

SECTION C-C

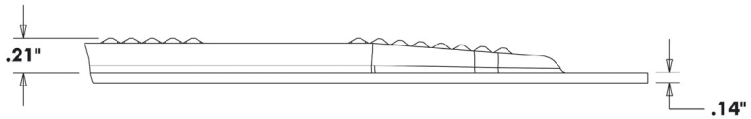

DETAIL B

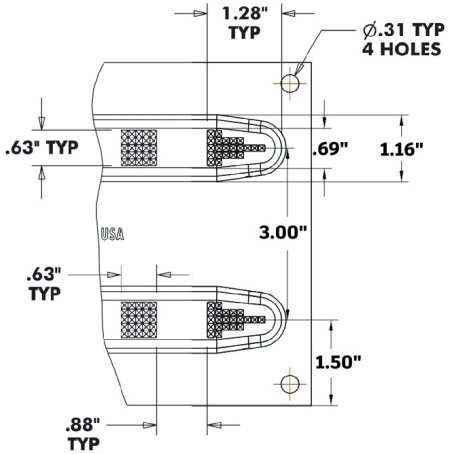

DETAIL A

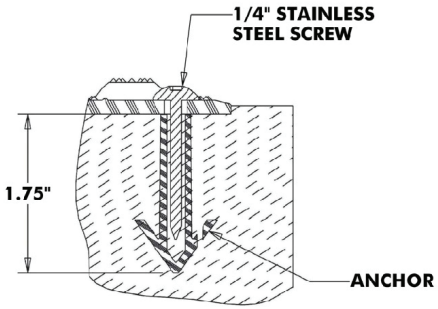

WET SET ANCHOR DETAIL
(FRESH CONCRETE)

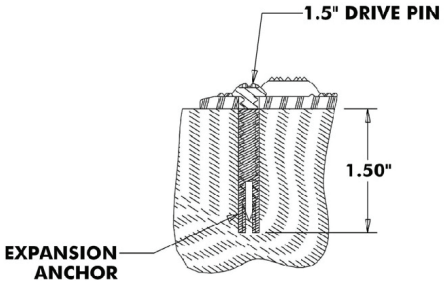

EXPANSION ANCHOR DETAIL
(HARDENED CONCRETE)

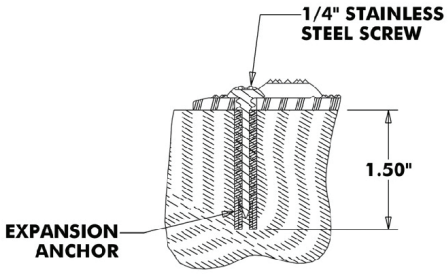

EXPANSION ANCHOR DETAIL
(ASPHALT)

12" X 12" X 10 GA (REPLACEABLE)

GALVANIZED STEEL TACTILE DIRECTION INDICATOR

TufTile®

DRW NO		REVISED	
DIR121210GV-XX-YYY			
TOLERANCE +/- 0.050	SCALE	REV 1	DATE 12/4/2024

NOTES:

"XX" WS DESIGNATES WET SET

"XX" SA DESIGNATES SURFACE APPLIED

"YYY"DESIGNATES COLOR

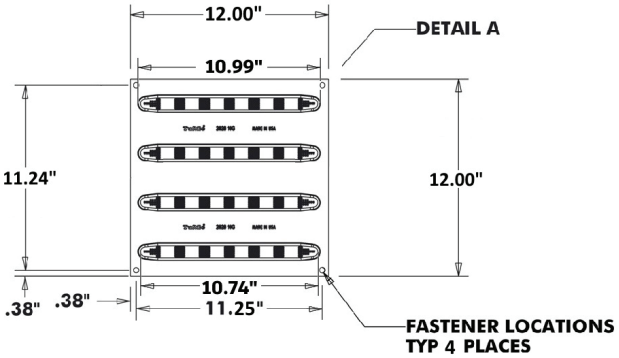

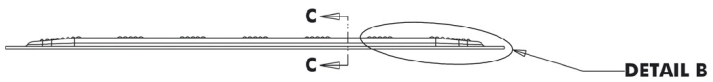

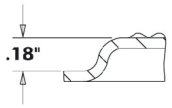

SECTION C-C

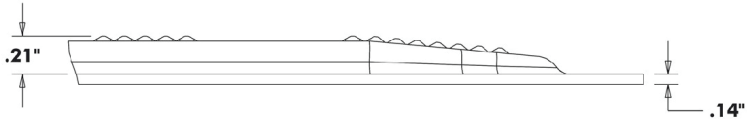

DETAIL B

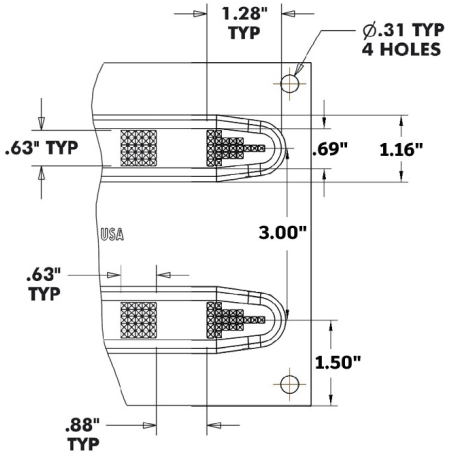

DETAIL A

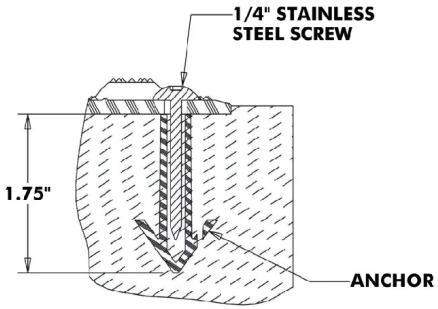

WET SET ANCHOR DETAIL
(FRESH CONCRETE)

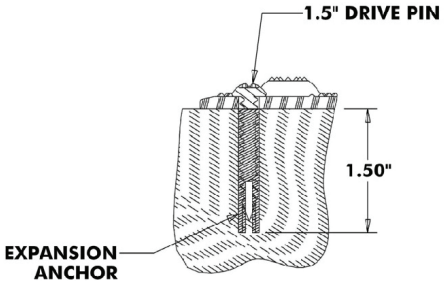

EXPANSION ANCHOR DETAIL
(HARDENED CONCRETE)

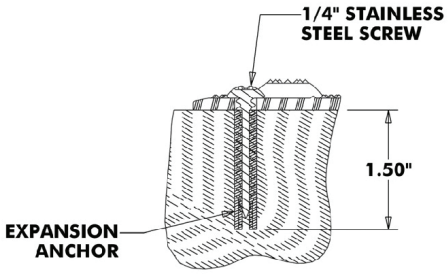

EXPANSION ANCHOR DETAIL
(ASPHALT)

12" X 24" X 10 GA (REPLACEABLE)

GALVANIZED STEEL TACTILE DIRECTION INDICATOR

TufTile®

DRW NO		REVISED	
DIR122410GV-XX-YYY			
TOLERANCE +/- 0.050	SCALE	REV 1	DATE 12/4/2024

NOTES:

"XX" WS DESIGNATES WET SET

"XX" SA DESIGNATES SURFACE APPLIED

"YYY"DESIGNATES COLOR

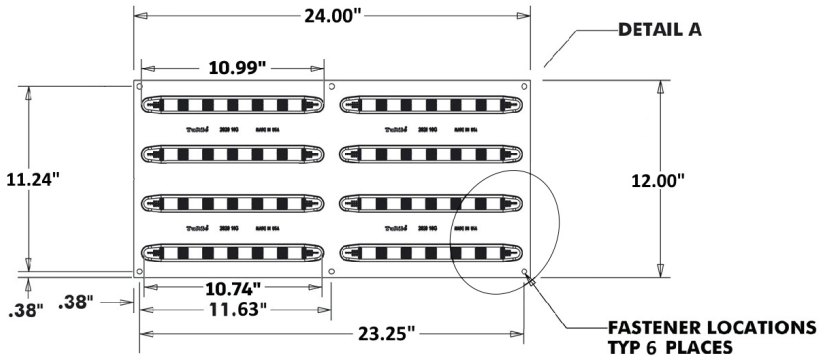

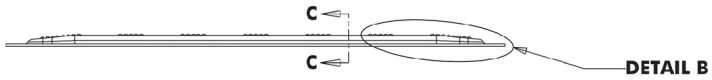

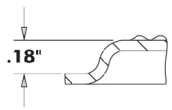

SECTION C-C

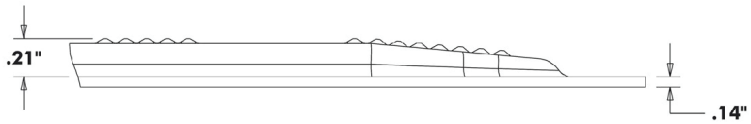

DETAIL B

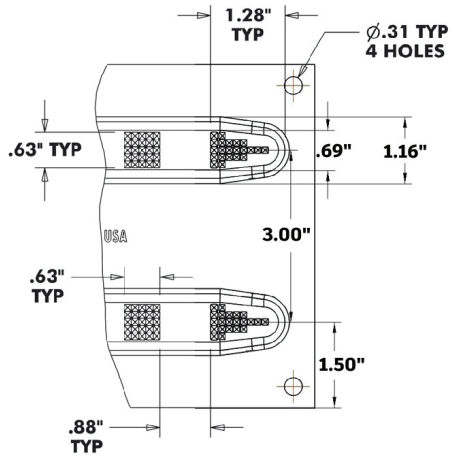

DETAIL A

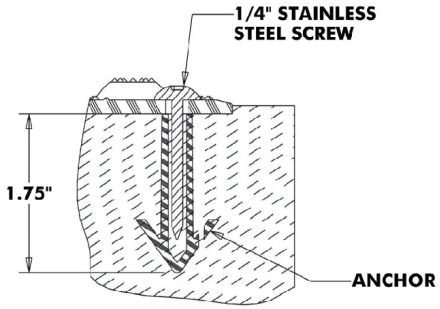

WET SET ANCHOR DETAIL
(FRESH CONCRETE)

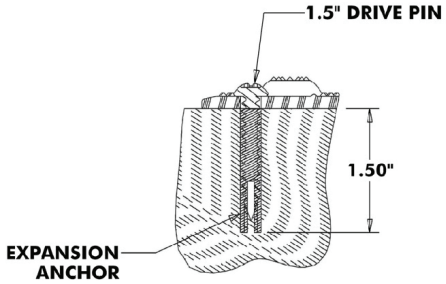

EXPANSION ANCHOR DETAIL
(HARDENED CONCRETE)

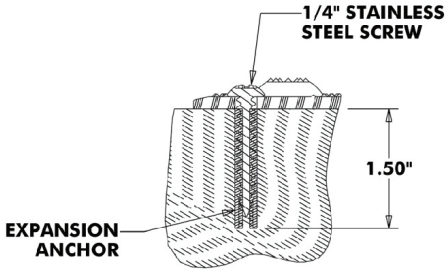

EXPANSION ANCHOR DETAIL
(ASPHALT)

12" X 60" X 10 GA (REPLACEABLE)

GALVANIZED STEEL TACTILE DIRECTION INDICATOR

TufTile®

DRW NO		REVISED	
DIR126010GV-XX-YYY			
TOLERANCE +/- 0.050	SCALE	REV 1	DATE 12/4/2024

NOTES:

"XX" WS DESIGNATES WET SET

"XX" SA DESIGNATES SURFACE APPLIED

"YYY"DESIGNATES COLOR

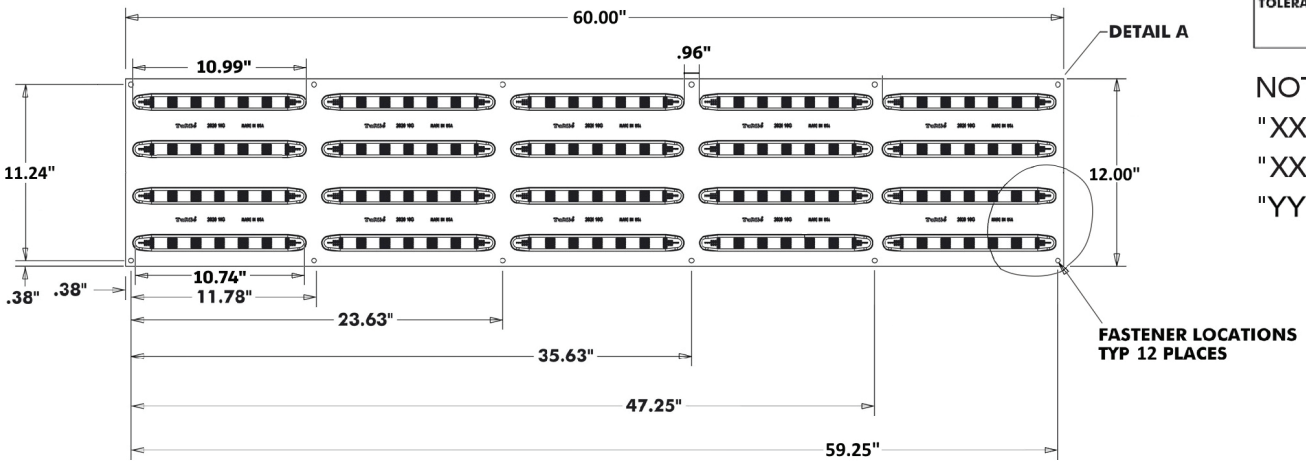

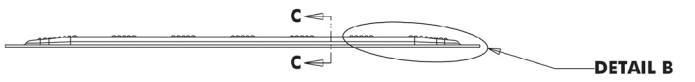

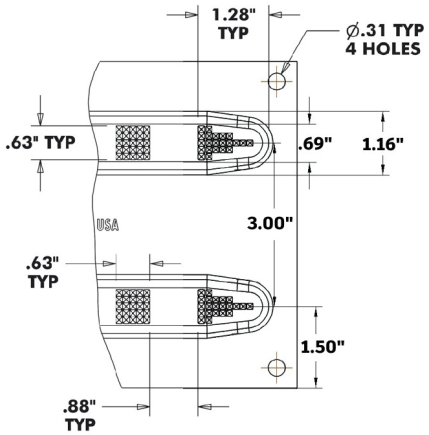

DETAIL A

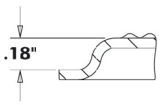

SECTION C-C

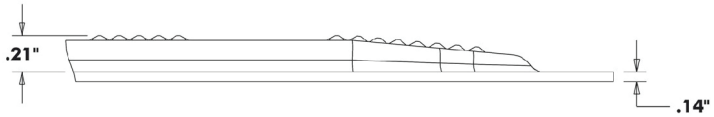

DETAIL B

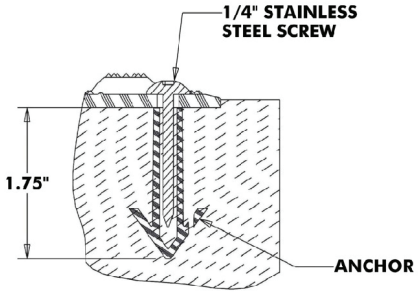

WET SET ANCHOR DETAIL
(FRESH CONCRETE)

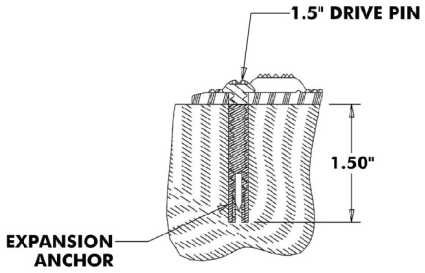

EXPANSION ANCHOR DETAIL
(HARDENED CONCRETE)

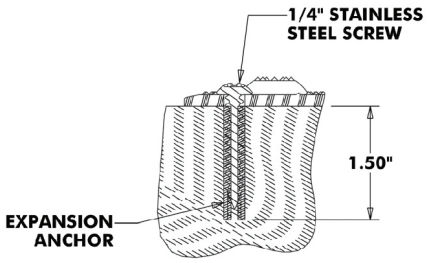

EXPANSION ANCHOR DETAIL
(ASPHALT)

12″ – 10 GA 30 DEGREE

GALVANIZED STEEL TACTILE DIRECTION INDICATOR

TufTile®

DRW NO		REVISED	
R-DIR122410GV-30-XX-YYY		02-17-26	
TOLERANCE	SCALE	REV	DATE
+/- 0.050		A	02-17-26

NOTES:
"XX" WS DESIGNATES WET SET
"XX" SA DESIGNATES SURFACE APPLIED
"YYY" DESIGNATES COLOR

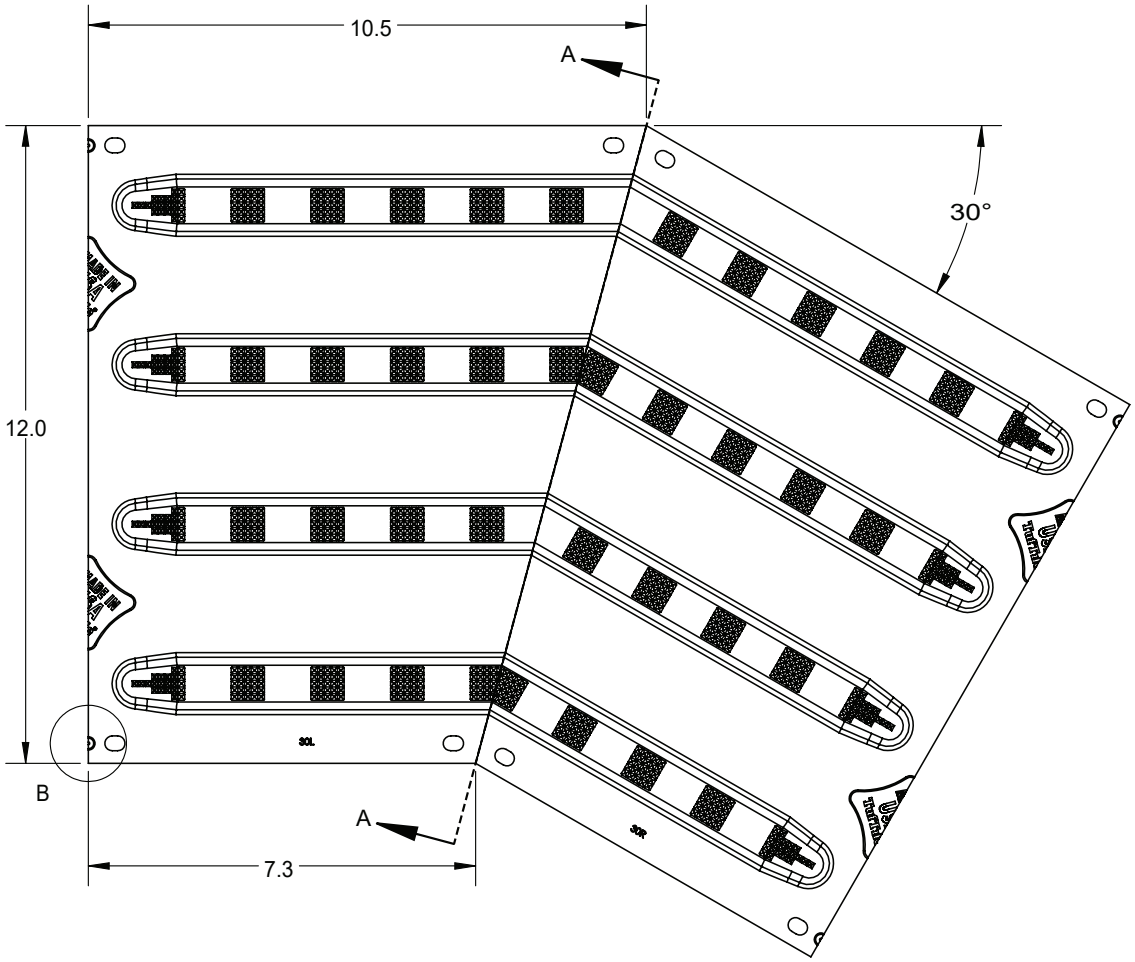

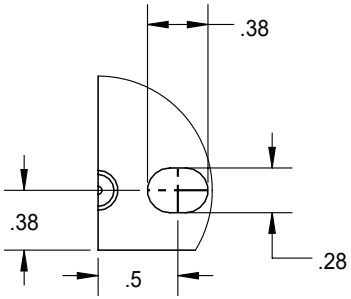

12" – 10 GA 45 DEGREE

GALVANIZED STEEL TACTILE DIRECTION INDICATOR

TufTile®

DRW NO		REVISED	
R-DIR122410GV-45-XX-YYY		02-18-26	
TOLERANCE	SCALE	REV	DATE
+/- 0.050		A	02-18-26

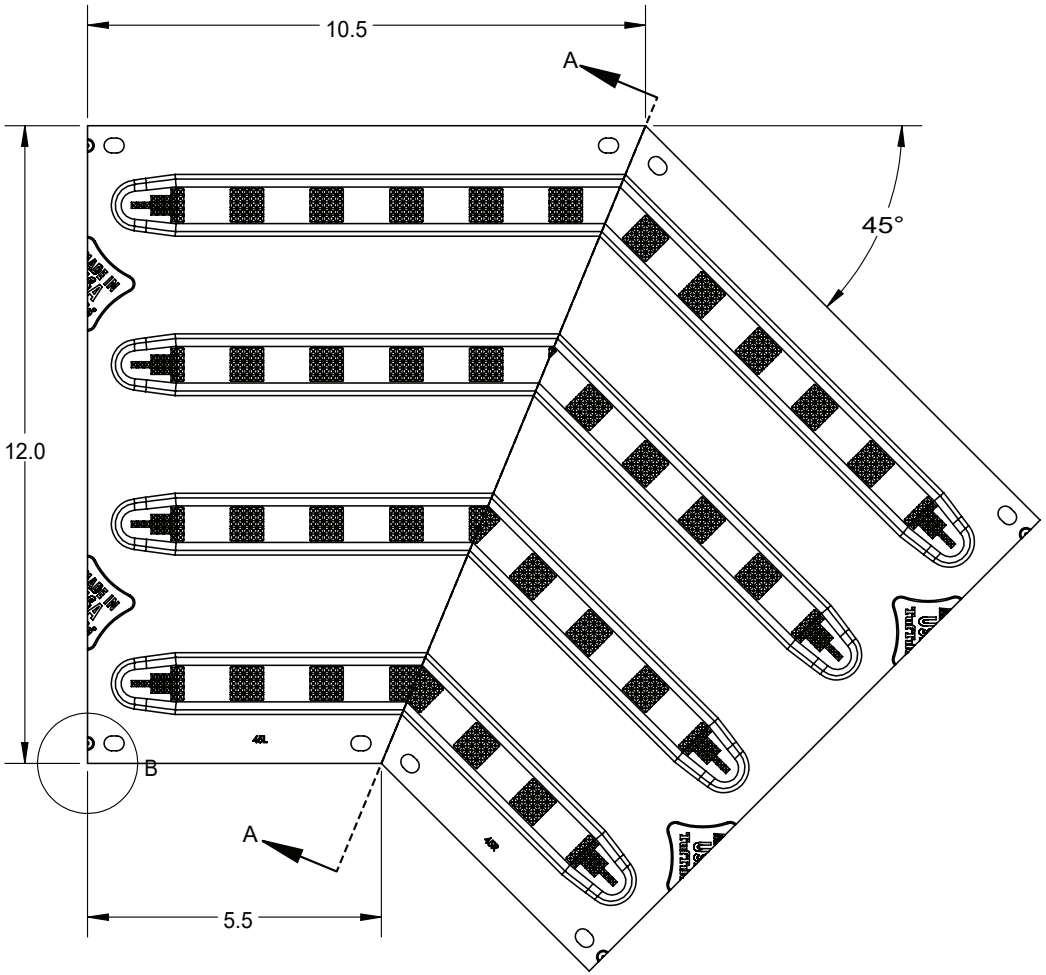

NOTES:

"XX" WS DESIGNATES WET SET

"XX" SA DESIGNATES SURFACE APPLIED

"YYY" DESIGNATES COLOR

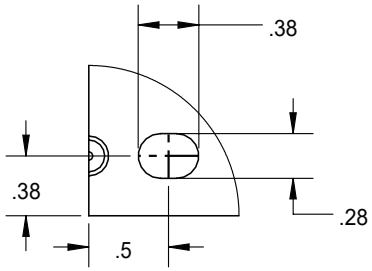

24" X 24" X 10 GA (REPLACEABLE)

TACTILE DIRECTION INDICATOR

TufTile®

DRW NO		REVISED	
DIR242410GV-XX-YYY			
TOLERANCE +/- 0.050	SCALE	REV 1	DATE 12/4/2024

NOTES:

"XX" WS DESIGNATES WET SET

"XX" SA DESIGNATES SURFACE APPLIED

"YYY"DESIGNATES COLOR

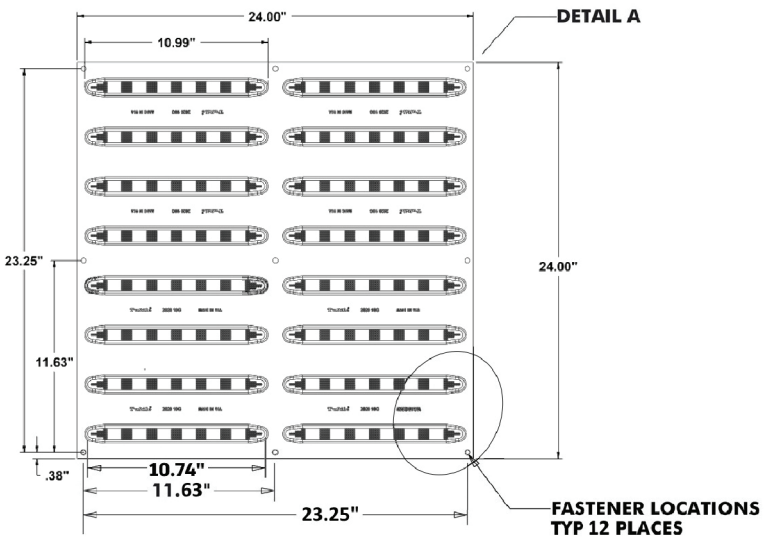

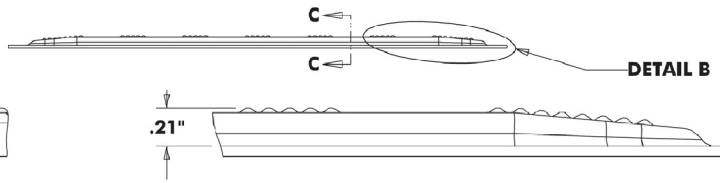

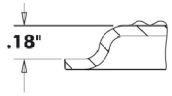

SECTION C-C

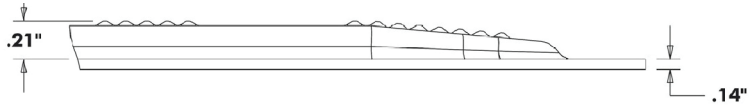

DETAIL B

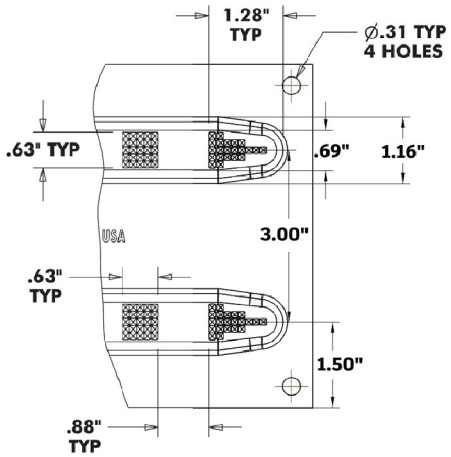

DETAIL A

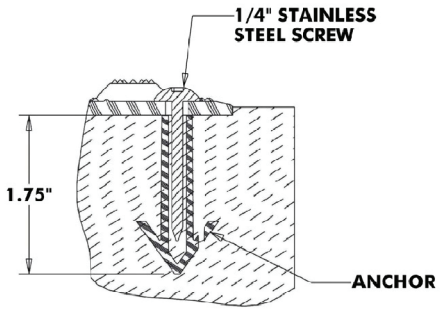

WET SET ANCHOR DETAIL
(FRESH CONCRETE)

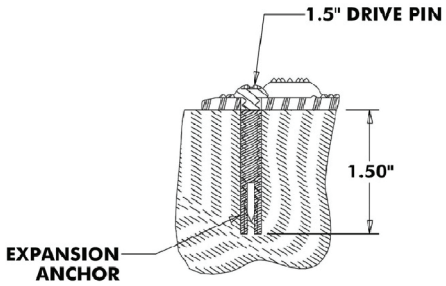

EXPANSION ANCHOR DETAIL
(HARDENED CONCRETE)

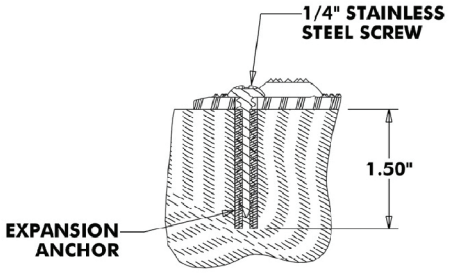

EXPANSION ANCHOR DETAIL
(ASPHALT)

TufTile®

BUY AMERICA ACT CERTIFICATION

By law, America manufactured products must be used in all Federal Transportation projects and all state and local government projects that use Federal Transportation funds.

The Buy America provision of the law explicitly requires steel, cast iron, and polymer-based products manufactured in United States mills, foundries, and other production facilities are used in Federal Transportation infrastructure projects. Under the various "Buy America" definitions, the following are those that we comply with:

- American Recovery and Reinvestment Act of 2009, Section 1605 – Buy America Act
- Infrastructure Investment and Jobs Act (IIJA; P.L. 117-58) November 2021
- Federal Highway Administration, 23 U.S.C. § 313 – Buy America; 23 C.F.R. § 635.410
- Federal Transit Administration, 49 U.S.C. § 5323(j)(1); 49 C.F.R. Part 661
- Federal Aviation Administration, 49 U.S.C. §50101

TufTile galvanized steel, cast iron, and polymer detectable warning tiles and radius-wedges are manufactured in the United States from United States made materials in accordance with Buy America, 23 C.F.R § 635.410 requirements.

Ted Meyers

Ted Meyers
President

TufTile®

GALVANIZED STEEL
10-YEAR LIMITED WARRANTY

TufTile, Inc. values your business, and the TufTile, Inc. tactile galvanized steel tile (the "product") you purchased comes with a limited warranty that the product will be free from defects for a period of ten years from date of installation subject to ordinary wear and tear. Further, TufTile warrants the product will not rust for 10 years. Failure to comply with recommended applications and installation of the product voids this warranty. Customer misuse including negligence, physical abuse and defects resulting from improper installation or resulting from outside forces (including, but not limited to, snow plows causing damage) are not covered by this warranty. Modifying galvanized tiles by way of cutting the tile may expose the cut edge area to rust. Modified tiles however, will remain structurally sound and cutting tiles will not impact the lifespan of the tile. Also, the rust at the exposed edge of the tile will not migrate under the powder coat finish. For modified (cut) tiles, TufTile's no-rust warranty remains in effect except at the tile edge. Local building codes may require minimum tactile tile performance specifications, and TufTile, Inc. does not warrant product installations that violate building codes. While within the limited warranty period, if the product is not in good working order for its intended purposes, a replacement product shall be made available to the purchaser of the product. Purchaser's remedy is limited to replacement of the product and no consequential or incidental damages and costs (including, but not limited to, lost profits, labor or transportation costs in connection with the removal, replacement and installation of the product) are recoverable or within the coverage of this limited warranty. Any representations made in connection with the sale of this product that differ from the terms of this limited warranty are not covered and should be brought to the attention of TufTile, Inc. immediately. No claim for replacement of a defective product will be honored without TufTile, Inc.'s reservation of its right to inspect the product for the claimed defect and its determination that the replacement of the product is covered by this warranty. The term of this limited warranty shall commence on the date of installation. Proof of purchase shall be required to be eligible for this warranty and to establish the commencement date of this limited warranty. No warranty replacement of the product is provided unless the purchaser's written replacement claim is submitted to TufTile, Inc. before the expiration of ten years from the date of installation of the product.

TO THE MAXIMUM EXTENT APPLICABLE AND ALLOWABLE UNDER LAW, THERE ARE NO WARRANTIES WHICH EXTEND BEYOND THE FACE OF THE TUFTILE INC. LIMITED WARRANTY, AND TUFTILE INC. DISCLAIMS ALL OTHER WARRANTIES, EXPRESS OR IMPLIED, REGARDING THE PRODUCT, INCLUDING ANY IMPLIED WARRANTIES OF MERCHANTABILITY, FITNESS FOR A PARTICULAR PURPOSE OR NON-INFRINGEMENT. TO THE MAXIMUM EXTENT ALLOWABLE BY FEDERAL AND STATE LAW, THIS WARRANTY SUPPLEMENTS OR SUPERSEDES FEDERAL AND STATE CONSUMER GOODS WARRANTY PRO